Transactions on the Built Environment vol 19, © 1996 WIT Press, www.witpress.com, ISSN 1743-3509

# Path planning for satellite mounted robots

R.W. Longman,[a] V.H. Schulz,[b] H.G. Bock[b]
[a]*Department of Mechanical Engineering, Columbia University, New York, NY 10027, USA*
[b]*Interdisciplinary Center for Scientific Computing, University of Heidelberg, D-69120 Heidelberg, Germany*

## Abstract

One of the most important problems in space based robotics is the disturbance to the satellite attitude and to the satellite microgravity environment caused by satellite mounted robot operation. This paper reports on the development of algorithms for optimal path planning that minimizes these disturbances, and solve the inverse kinetics problem, i.e. with the satellite attitude control system off. Specific optimality criteria are studied, including minimum induced angular velocity of the satellite and minimizing the maximum acceleration of the satellite center of mass. In addition, the space based analog is generated for the common ground based linear interpolation in joint or Cartesian space, i.e. shortest distance paths. Some properties of the various types of optimal paths are developed analytically, and understanding of the typical nature of the optimal paths is obtained in numerical examples. The shortest paths in principal planes, seen in inertial space, are shown to be arcs of circles. The computation required to produce such optimized trajectories is 1 or 2 minutes on a workstation, and methods can be used to substantially decrease this number if necessary. Thus, it can be practical to make use of these optimized path plans in space.

## 1 Introduction

During on-orbit operations it will become increasingly common to have robots on satellites manipulating loads with masses that are not negligible compared to that of the satellite. Such operation presents various challenges, one of which is path planning, a topic that receives considerable attention for ground based robots, and one that is significantly more complicated in space. The complication comes from the fact that the robot is not mounted on an inertially

fixed base, but rather on the satellite that can move in response to the robot motion. This affects what one must command the robot to do in order to get the end-effector to the desired position in space. A related second class of difficulty is that the robot motions produce attitude and acceleration disturbances to the satellite. The attitude disturbances can be a serious problem for any experiments on board that require fine pointing of instruments. The translational accelerations (plus the attitude disturbances) can be a serious concern when the satellite houses experiments designed to take advantage of the micro-gravity environment offered by spaceflight. The literature relating to these problems has become quite large. No attempt is made here to review this literature. We simply cite our previous works in the field [1-11]. Some works by other authors can be found in [12,13], the book containing [11], and in a special issue of the IEEE Transactions on Robotics and Automation.

Two basic topics in the field of robotics are the forward kinematics and the inverse kinematics problems. Reference [1] introduces new space-based kinematics for robots mounted on satellites with the attitude control system (ACS) in operation. References [2,5] give this new space-based forward and inverse kinematics for the shuttle Remote Manipulator System (RMS). These are still kinematic problems except that the kinematic equations contain mass ratios.

The kinematics problems change character when the ACS is turned off, as it often is during RMS operation on the Shuttle. Some reasons to turn off the ACS are: 1) It uses gas thrusters and is necessarily an on-off system. When the robot is about to grasp a satellite, and the attitude control system happens to decide that the attitude error has now reached the threshold where correction is necessary, then turning on the attitude control thrusters could easily cause a collision of the robot with the satellite. 2) Even when actuators are used that do not necessitate on-off operation, such as reaction wheels or control moment gyros, inaccuracies and transients (e. g., overshoot) in the ACS performance might still suggest robot operation with the ACS off. 3) In the case of the shuttle, the ACS is often turned off to avoid ACS exhaust gas impingement on the manipulated load. 4) If one can be smart enough about planning the robot maneuver, the robot joint history can be chosen to correct its own attitude disturbances, thus saving ACS fuel.

With the ACS off, the satellite is free not only to translate, but to rotate, as a result of robot motion. In this case, the problem of positioning the load is no longer a kinematics problem, but a full dynamic problem where the final load position and orientation is a function of the whole history of the joint angles rather than a function of only the final joint angles as in the ground based or attitude-fixed satellite cases. Reference [3] introduces two new terms, the *forward kinetics problem* and the *inverse kinetics problem*, in place of the forward kinematics and inverse kinematics problems for this situation. The inverse kinetics problem asks not only what joint angle histories do you need to get the load positioned and oriented, but also what orientation do you want for the satellite base at the end of the maneuver. Reference [3] presents a complete

Transactions on the Built Environment vol 19, © 1996 WIT Press, www.witpress.com, ISSN 1743-3509



"analytical" solution to the new inverse kinetics problem, although it is one that is not likely to be used in practices. Vafa and Dubowsky (e.g. [14]), discuss the same kinds of problems by their virtual manipulator approach, and present a numerical approach to the inverse kinetics problem.

References [6-9] make use of numerical methods for solving optimal control problems to come up with more sophisticated path planning methods for the inverse kinetics problem. These methods are summarized here. The path planning algorithms find paths to reach the desired endpoint and simultaneously minimize the attitude and/or acceleration disturbance to the satellite on which the robot is mounted.

The numerical algorithms used in [6] are described in [15], and a new more sophisticated numerical optimization code that can handle collision constraints is developed in [8,16]. The authors have used such codes in other robot optimization problems, specifically for time optimal motion of ground based robots [17-22]. Often on assembly lines, one robot is the slowest in accomplishing it task, and then that robot determines the cycle time for the complete line. Using an optimized trajectory for that robot can speed up the entire assembly line. Similar optimization codes were used to find ways to minimize energy consumption in subway train operation. Tests of a simple form of the method on the Flushing Line in New York City showed an 11% decrease in energy consumption, predicting an $11 million savings per year, and it was implemented throughout the system. In the following sections we review the analytical solution to the inverse kinetics problem [3], and then develop analytical and numerical properties of optimal path solutions to the problem.

## 2 The satellite-mounted robot inverse kinetics problem

The feasible solution of the inverse kinetics problem given in [3] is described in Fig. 1 in terms of a seven stage sequence of operations. Stage 1 starts with the current robot position and follows any chosen path to align the robot arm along a system principal axis. One solves the forward kinetics problem to determine the resulting configuration. The robot arm then executes a coning motion about this principal axis. Coning is analogous to spinning a wheel inside the spacecraft, and hence will rotate the spacecraft about this principal axis by any desired amount. The governing equations are necessarily nonlinear, and are related to the equations for kinematic drift of an inertial platform. A second order analytic solution is given in [3]. Stage 3 realigns the robot arm along another principal axis, and Stage 4 does coning about this axis. Stages 5 and 6 do the same for the third principal axis. Then Stage 7 moves the joints of the robot to the final desired angles by making any specific choice of path. For this Stage one again uses the forward kinetics solution, but this time one solves the equations backwards to find the starting satellite orientation needed in order to end on the desired configuration. Then the initial satellite attitude for Stage 2 and the final satellite attitude for Stage 6 are known. It is then necessary to determine how much coning to do in Stages 2, 4, and 6 so that when these

Stages are combined with transfers from one principal axis to the next in Stages 3 and 5, the end result is the needed satellite rotation for Stages 2 through 6. Reference [3] gives an analytical solution to this problem governing Stages 2 through 6, which happens to be an inverse kinematics problem. When combined with the second order solution for the amount of coning needed along each principal axis, one obtains an analytical solution to the inverse kinetics problem.

Note that the usual inverse kinematics problem in robotics has more than one solution, but only a small number of solutions. On the other hand, the inverse *kinetics* problem discussed here usually has an uncountably infinite number of solutions. The above solution is the only analytical solution available. We now use numerical methods to find optimizes solutions.

## 3 Computation time and the practicality of real time implementation of optimal path planning

Those who have some experience solving optimal control problems might worry that the difficulty of obtaining solutions and the computation necessary might preclude use of optimal path planning in practice. This is not the case.

For the model used in the computations here, the computation time needed to obtain numerical solutions for typical path planning problems was around 1/2 minute. The longest computation times were those that found minimum time trajectories which took roughly 2 minutes. The computation discussed below of the robot path that minimizes the maximum acceleration of the shuttle, and must avoid collision with parts of the shuttle, took 91 seconds. These computations were performed on a Silicon Graphics workstation Iris Indigo under IRIX operation system Release 4.0.5F. The workstation is equipped with a 50 MHz R4000/R4010 processor.

If needed, these computation times can be decreased substantially, in order to make use of the optimal path planning in a real time environment. All of the computations were started from an initial trajectory that represents linear interpolation in joint space between the start and the end positions. One can pre-compute a set of optimal paths for start and end points spaced throughout the workspace. When a path is to be generated, the nearest entry in this set is then used as the starting condition so that many iterations are eliminated in the convergence process. If additional time savings are needed, approximately half of the algorithm can be parallelized, allowing a decrease in computation time by a factor somewhat less than 2.

## 4 The model used in the optimal path planning examples

We use a three degree-of-freedom arm with a point mass load model (or equivalently, a distributed rigid body load whose attitude is to be maintained inertially fixed during the maneuver). The reasons for not considering a full inertial load and a six degree-of-freedom arm are not just for simplicity of computation. The simpler problem may be the more important problem for

Transactions on the Built Environment vol 19, © 1996 WIT Press, www.witpress.com, ISSN 1743-3509



engineering applications, and the nature of the problem changes when the load inertia is added to the model. Without including load inertia, the optimization cannot seek to take advantage of spinning the load to obtain desired torque cancellations on the spacecraft. In practice such spin would be limited by the joint limits, typically less than 180 deg in each direction, so that making use of these effects has limited potential. More important is that the load is likely to be a satellite that one would not want to spin, to avoid damage to delicate parts.

The model used makes use of numbers that apply to the shuttle and the RMS. The dimensions of the first three RMS links are used for the satellite mounted robot, and shuttle inertia values are used with some off diagonal terms set to zero for simplicity of visualization. The load mass being manipulated by the arm is taken as 1/7th of the mass of the shuttle. The masses of the robot links are considered negligible compared to that of the shuttle and load, and their inertias are negligible compared to that of the shuttle. The shuttle attitude control system is turned off. The system center of mass is considered at rest in inertial space, with the initial satellite attitude at rest. Thus, if one is interested in an earth pointing attitude, the duration of the maneuver is short compared to the period of orbital motion, so that coriolis and centrifugal forces can be neglected. Gravity gradient torques and differential forces are neglected.

## 5 Some theoretical results on optimal path planning

We consider several optimization criteria, including minimum attitude disturbance, minimum time, minimum maximum acceleration, and shortest distance paths in either satellite coordinates or inertial coordinates.

### 5.1 Minimum attitude disturbance paths

Consider minimizing the attitude disturbance to the satellite during the robot maneuver, in order to decrease disturbances to fine pointing equipment. For a fixed total time maneuver from given starting load position in inertial space to a given final load position in inertial space, pick the path so as to minimize the integral of the norm of the shuttle angular velocity induced by the motion of the load. We also require that the initial and final shuttle attitudes be identical.

Under the given model, there is a straightforward theoretical solution to this problem, which employs a two stage maneuver. The load is first moved along a straight line from the initial position to the system center of mass. Then it is moved on a straight line from the system center of mass radially out to the desired final position.

This path produces no disturbance to the satellite attitude at any time during the maneuver, and hence not only are the initial and final shuttle attitudes identical, but the attitude remains unchanged throughout. The center of mass of the system is likely to be in the middle of the shuttle bay, so that there actually may be some situations where one could perform this maneuver, but usually this solution will not be feasible due to collision problems of the

load or robot with the shuttle. Nevertheless, it gives an indication of the general nature of such optimal solutions in the presence of collision constraints. We will refer to this maneuver as the V-maneuver in the sequel.

### 5.2 Minimum time paths

References [16-21] treat minimum time optimal control problems for ground based robots. In space applications, speed is less likely to be the dominant concern, but one can imagine situations in the construction of space stations where the robot is repeatedly performing some assembly task, and increasing the speed would be helpful.

People tend to think of time optimal control as producing bang-bang solutions where each actuator must work at its maximum strength at all times. Reference [17] shows for ground based time optimal robot maneuvers, that one robot joint is always bang-bang, but that usually the other robot joints have singular arcs where the actuator is not operating at its maximum level. For the given start and end points, there generally is one joint that has the hardest task to accomplish, and it is this joint that must be bang-bang. Other joints have extra time to arrive at their endpoints, and this freedom may be used to help the joint with the most difficult task by producing reaction forces that help, by producing coriolis or centrifugal forces that help, by decreasing the inertial seen by the other joint, or by moving in such a way as to have gravity help the other joint. During portions of the trajectory when no such help is possible, the secondary joints go onto singular arcs.

Schulz[8] proves that the same is true for satellite mounted robots. Thus, for the robot-satellite model described above, with bounded actuator limits, the time optimal robot paths have the property that there is always at least one control that is at its upper or lower bound. The application of maximum torques in some robot joint leads to large accelerations of the spacecraft, and in the next section we consider optimization criteria to minimize such acceleration.

### 5.3 Paths that minimize the maximum acceleration of the satellite

When users need a microgravity environment on the spacecraft, it is important to limit the magnitude of the spacecraft accelerations due to robot motion. One can always do so by making the maneuver sufficiently slow. But one can be more intelligent than that. One can pick a time period for the maneuver, then find the robot path to minimize the maximum acceleration of the shuttle for that time period, and repeat with different periods to choose the shortest maneuver time consistent with a chosen acceleration limit.

For maneuvers that minimize the maximum inertial acceleration of the shuttle center of mass, [8] proves that the magnitude of the inertial acceleration of the shuttle is a constant at all times during the maneuver. Similarly, the load undergoes constant acceleration magnitude at all times during the maneuver. At the beginning, the acceleration is forward along the path of motion, at the end it

is backward along the path to stop the motion, and in between the acceleration vector rotates maintaining its magnitude. The resulting paths are very smooth.

In a similar way, one can examine a more specialized cost functional designed to minimize the inertial acceleration of a specific point on a spacecraft where a microgravity experiment is located. This acceleration can be written in terms of the acceleration of the spacecraft center of mass and its angular motion, and hence the appropriate cost function is a combination of the effects considered in this section and those in Section 5.1.

## 5.4 Principal plane paths

In ground based robotics, the most common form of path planning in industrial practice is linear interpolation in joint space between taught points, or alternatively, linear interpolation in Cartesian space. These paths represent the shortest path between the start and end points in the chosen space. Typically, the time dependence along the path uses chosen acceleration profiles at the start and end with a constant velocity portion in the middle.

For a robot mounted on a satellite this simple interpolation scheme does not produce a feasible trajectory. The natural generalization to the space based problem is to find space based solutions that satisfy the same minimum arc length property in the chosen space as does linear interpolation in the ground based robot case. This time, one can consider minimum arc length in joint space, minimum arc length in satellite fixed Cartesian coordinates, and minimum arc length in inertially fixed Cartesian coordinates. For ground based problems, the minimum arc length in joint space is much simpler than in inertial space since it avoids inverse kinematic solutions, but in the space based case there is no computational advantage and no apparent other advantage, and hence we will eliminate it from consideration. The second option minimizes length in robot base coordinates which could be of interest, and the third does so in inertial space, which reflects the actual forces and torques needed to perform the maneuver. The optimal paths that satisfy these two criteria, as well as the paths that minimize the maximum acceleration discussed above, all satisfy the following property, that they do not depend on the specific configuration of the robot. This is to be compared with time optimal paths with actuator saturation limits, where the optimal paths depend heavily on the robot configuration.

Consider the problems of minimum length in inertial space, in satellite coordinates, and minimum maximum acceleration. Suppose that the initial position of the load and the final position of the load lie in the same principal plane of inertial of the shuttle. References [7,8] show that in this case if there is a solution to the problem constrained to stay in this principal plane throughout the motion, then that solution is also a solution without the constraint.

Making use of this result, the references go on to prove the following: Assume that the load path of the solution does not intersect itself. Then, robot paths that are of minimum length as seen in inertial coordinates, and start and

end in the same satellite principal plane, are arcs of circles. The radius of the circle can be obtained relatively easily by solving a single scalar equation.

## 6 Numerical results

The left part of Fig. 2 shows five optimal paths that minimize the path length of the load motion as seen in robot base coordinates, i.e. shuttle fixed coordinates (optimal trajectories avoiding collision are considered below). The right half shows the same problems done in a different principal plane having somewhat smaller associated shuttle inertia. Since these are shortest path solutions, they are only unique to within a reparameterization. Stated in physical terms, one can pick any time history to follow the shortest path, and the resulting history is an optimal solution. The figure indicates the five trajectories by the letters A, B, C, D, E where the start and end of each arc are the start and end points of the desired maneuver of the robot load as seen in shuttle coordinates. The maneuver is to be performed so that the robot gets the load to the desired end position, and simultaneously returns the shuttle to its original attitude. Although the paths may look like arcs of circles in the left part of the figure, they are not perfect circles, as seen when we change the inertia of the satellite in the right half of the figure. Note that these minimum arc length solutions have some relationship to the V-maneuver defined above, and appear closer to the V-maneuver when they are large scale maneuvers, and become rounder when the endpoints of the maneuver are closer.

Figure 3 shows the paths for the same start and end points, but this time they are optimal in the sense that they minimize the path length as seen in inertial space. Both the load paths and the paths of the center of mass of the shuttle are indicated, with O representing the system center of mass which is inertially fixed. As predicted from the theoretical results, these curves are arcs of circles. When the initial and final orientations of the satellite coincide, the radius of the circle is independent of the shuttle moment of inertia. Figure 4 shows these same minimum length trajectories viewed in spacecraft coordinates, where the path does appear dependent on the inertia of the shuttle, as seen by comparing the left and right halves of the figure.

The corresponding maneuvers to minimize the maximum acceleration of the shuttle were also run. Again, the paths are independent of the inertia of the shuttle as seen in inertial space. The figures corresponding to Figs. 3 and 4 look essentially identical to these figures, and hence are not shown here. However, they are not in fact identical, the only easily discernible difference appearing in maneuver A which appears slightly more rounded with this new objective function. This similarity is important since it means that shortest distance paths in inertial space are close to being paths that can minimize the maximum acceleration of the spacecraft, with use of an appropriate time history producing a constant acceleration magnitude.

We now turn to maneuvers that do not remain in a principal plane. The maneuver considered can be described as going from rather high above the front

Transactions on the Built Environment vol 19, © 1996 WIT Press, www.witpress.com, ISSN 1743-3509



of the shuttle bay, to lower over the middle of the shuttle bay. Figure 5 shows the result of using linear interpolation in joint space to perform the maneuver without concern for the disturbance to the shuttle attitude, which is seen to be quite different at the end of the maneuver. The solid circles indicate the position of the load and the center of mass of the shuttle. The corners of the box in the background are inertially fixed. Figure 6 give the shortest path solution in shuttle fixed coordinates (light line) and the shortest path solution in inertial coordinates (dark line). Parts a, b, c, and d are snapshots of the maneuver at four successively larger times. Figure 7 shows the minimum time solution with a specific choice of the actuator limits (1000 ft-lbs), and a joint velocity limit of 0.5 deg/sec is used. As expected this maneuver is not as smooth as the trajectories for the other criteria.

An important issue in applying path planning strategies is collision avoidance. The optimization code developed in [8] is capable of handling state inequality constraints. Figure 8 presents a path giving minimum maximum acceleration of the shuttle center of mass, both with and without constraints to avoid collision. Minimum maximum acceleration paths tend to stay close to the plane defined by the initial position, the final position, and the center of mass of the shuttle, even when this is not a principal plane for the shuttle inertia. The path tends to stays relatively far from the shuttle. Figure 8 deliberately chooses a starting point in front of the shuttle to create the needed situation for collision avoidance. The optimal path without collision avoidance hits the front part of the shuttle, goes through part of the cabin and reappears in the shuttle bay, as shown by the line with a gap in Fig. 8. To avoid collision, a smooth constraint boundary is wrapped around the shuttle, whose shape is suggested by the lines in the left part of the figure. The optimal trajectory with this chosen constraint boundary is shown in the figure. The two open circles indicate points at which the optimal trajectory touches the constraint boundary.

## 7 Conclusions

This paper presents path planning methods for satellite mounted robot manipulators. These methods can be applied to satellites with the attitude control system on, in order to find paths that minimize disturbances to the spacecraft microgravity environment and the attitude control system while it operates. They are used here to find paths that minimize various objective functions when applied to systems with the attitude control system turned off. The method makes use of a new numerical optimization code, which is highly efficient and can handle inequality constraints for collision avoidance. The methods are shown to be sufficiently fast to be usable for path planning in space operations.

Some previous work in the field of path planning for robots mounted on satellites with the control system turned off, have emphasized the use of paths containing cycles that accomplish some net cancellation of satellite base

rotation [14,3]. The results here show that there is no need for such "loops" in the trajectory, that trajectories that minimize the disturbance to the robot base can be smooth and simple. There is a tendency for all of the optimized trajectories obtained here, to connect the start and end points with a path that comes closer to the shuttle than either the start point or the end point, going part way toward the V-maneuver.

Minimum inertial arc length trajectories were studied that are the space based analog of common ground based path planning method using interpolation in Cartesian space. These minimum length trajectories for planar maneuvers are shown to be arcs of circles in space based robotics.

## References

1. Longman, R.W., Lindberg R.E. & Zedd, M.F. Satellite-mounted robot manipulators -- new kinematics and reaction moment compensation, *International Journal of Robotics Research*, 1987, **6**, 87-103. Also, *Proceedings of the 1985 AIAA Guidance, Navigation and Control Conference*, August 1985, 278-290.

2. Lindberg, R.E., Longman, R.W. & Zedd, M.F. Kinematics and reaction moment compensation for a spaceborne elbow manipulator, Paper No. AIAA-86-0250, *AIAA 24th Aerospace Science Meeting*, Reno, Nevada, January, 1986.

3. Longman, R.W. The kinetics and workspace of a satellite-mounted robot, *The Journal of the Astronautical Sciences*, 1990, **38**, 423-440. Also, *Proceedings of the 1988 AIAA Guidance, Navigation, and Control Conference*, August 1988, 374-381.

4. Longman, R.W. Attitude tumbling due to flexibility in satellite-mounted robots, *The Journal of the Astronautical Sciences*, 1990, **38**, 487-509. Also, *Proceedings of the 1988 AIAA Guidance, Navigation, and Control Conference*, August 1988, 365-373.

5. Lindberg, R.E., Longman, R.W. & Zedd, M.F. Kinematic and dynamic properties of an elbow manipulator mounted on a satellite, *The Journal of the Astronautical Sciences*, 1990, **38**, 397-421.

6. Schulz, V.H., Bock, H.G. & Longman, R.W. Optimal path planning for satellite mounted robot manipulators, *Advances in the Astronautical Sciences*, 1993, **82**, 311-329.

7. Schulz, V.H., Bock, H.G. & Longman, R.W. Shortest paths for satellite mounted robots, *Computational Optimal Control*, ed R. Bulirsch & D.

Transactions on the Built Environment vol 19, © 1996 WIT Press, www.witpress.com, ISSN 1743-3509



Kraft, International Series on Numerical Mathematics, Vol. 115, pp. 357-366, Birkhäuser Verlag, Basel, Boston, Berlin, 1994.

8. Schulz, V.H. *Reduced SQP Methods for Large-Scale Optimal Control Problems in DAE with Application to Path Planning Problems for Satellite Mounted Robots*, PhD Dissertation, University of Heidelberg, Heidelberg, Germany, 1995.

9. Schulz, V.H. Optimal paths for satellite mounted robots, *ZAMM*, Special Issue on ICIAM 95, in press.

10. Longman, R.W. New problems in space flight operations introduced by satellite mounted robots, plenary lecture, *Proceedings of the 3rd International Symposium on Spacecraft Flight Dynamics*, Darmstadt, Germany, European Space Agency, 1991.

11. Longman, R.W. Tutorial overview of the dynamics and control of satellite-mounted robots, Chapter 10, *Teleoperation and Robotics in Space*, ed C. F. Ruoff and S. B. Skaar, Progress in Astronautics and Aeronautics Series, Vol. 161, pp. 237-258, American Institute of Aeronautics and Astronautics, 1994.

12. Longman, R.W. & Lindberg, R.E., Guest Editors, Special issue on robotics in space, *The Journal of the Astronautical Sciences*, 1990, **38**, contains references 3-5.

13. Xu, Y. & Kanade, T. (eds). *Space Robotics: Dynamics and Control*, Kluwer Academic Publishers, New York, 1993 (contains references 3, 5).

14. Vafa, Z. & Dubowsky, S. On the dynamics of space manipulators using the virtual manipulator, with application to path planning, *The Journal of the Astronautical Sciences*, 1990, **38**, 441-472.

15. Bock, H.G. & Plitt, K.-J. *A Multiple Shooting Algorithm for Direct Solution of Optimal Control Problems*, Sonderforschungsbereich 72 Preprint, The University of Bonn, West Germany, 1983; also *Proceedings of the 9th IFAC World Congress*, Budapest, 1984.

16. Schulz, V. A direct PRSQP method for path planning of satellite mounted robots, *ZAMM*, Special Issue on ICIAM 95, in press.

17. Konzelmann, J., Bock, H.G. & Longman, R.W. Time optimal trajectories of polar robot manipulators by direct methods, *Modeling and Simulation*, Instrument Society of America, 1989, **20**, 1933-1939.

18. Steinbach, M., Bock, H.G. & Longman, R.W. Time-optimal extension or retraction in polar coordinate robots: a numerical analysis of the switching structure, *Journal of Optimization Theory and Applications*, March 1995. Also, *Proceedings of the AIAA Guidance, Navigation, and Control Conference*, Boston, 1989, 883-894.

19. Konzelmann, J., Bock, H.G. & Longman, R.W. Time optimal trajectories of elbow robots by direct methods, *Proceedings of the 1989 AIAA Guidance, Navigation, and Control Conference*, Boston, 1989, 895-910.

20. Steinbach, M., Bock, H.G. & Longman, R.W. Time optimal control of SCARA robots, *AIAA Guidance, Navigation and Control Conference, A Collection of Technical Papers,* Portland, Oregon, 1990, 707-716.

21. M. Mössner-Beigel, *Optimale steuerung für Industrieroboter unter Berücksichtigung der getriebebedingten Elastizität*, Diplomarbeit, University of Heidelberg, 1995.

22. B. Wolf, *Numerische Bahnoptimierung von Robotern unter Berücksichtigung von Gelenkreibung*, Diplomarbeit, University of Heidelberg, 1995.

23. Bock, H.G. & Longman, R.W. Optimal control of velocity profiles for minimization of energy consumption in the New York subway system, *Proceedings of the Second IFAC Workshop on Control Applications of Nonlinear Programming and Optimization*, Oberpfaffenhofen, West Germany, 1980, International Federation of Automatic Control, 1980, 34-43.

24. Bock, H.G. & Longman, R.W. Computation of optimal controls on disjoint control sets for minimum energy subway operation, (ed H.-M. Hsia, R. W. Longman, and Y.-L. Chou) pp. 949-972, *Advances in the Astronautical Sciences*, 1985, **50**, American Astronautical Society, 1985.

Transactions on the Built Environment vol 19, © 1996 WIT Press, www.witpress.com, ISSN 1743-3509



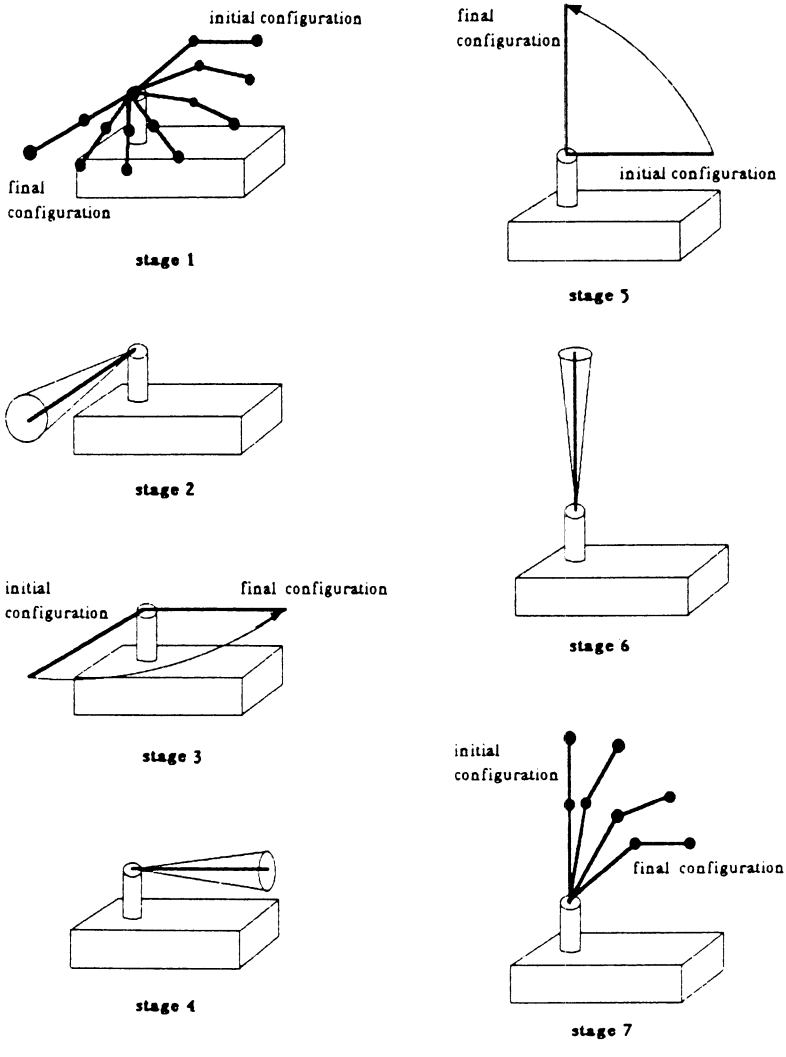


Figure 1: The seven stages of a feasible solution to the inverse kinetics problem as seen in satellite coordinates.

Transactions on the Built Environment vol 19, © 1996 WIT Press, www.witpress.com, ISSN 1743-3509



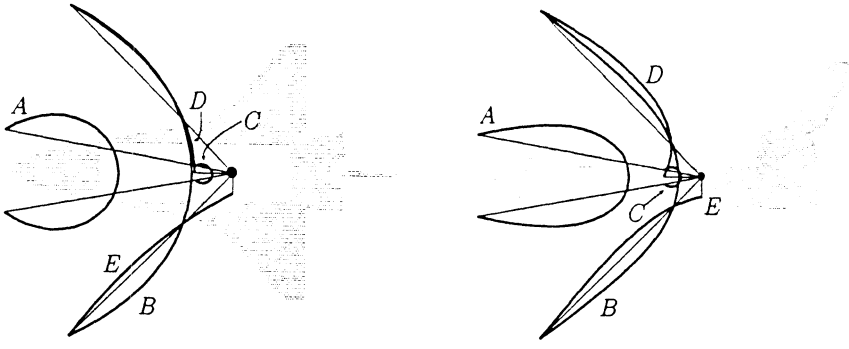


Figure 2: Robot paths in principal planes minimizing path length in shuttle coordinates. Optimal paths are shown for two principal planes.

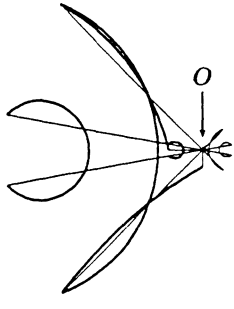


Figure 3: Shortest paths in inertial space for the load and shuttle center of mass.

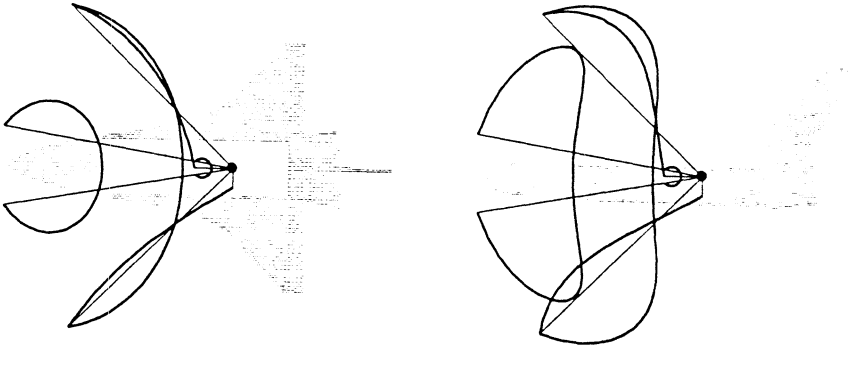

Figure 4: Shortest paths in inertial space as seen in shuttle coordinates.

Transactions on the Built Environment vol 19, © 1996 WIT Press, www.witpress.com, ISSN 1743-3509


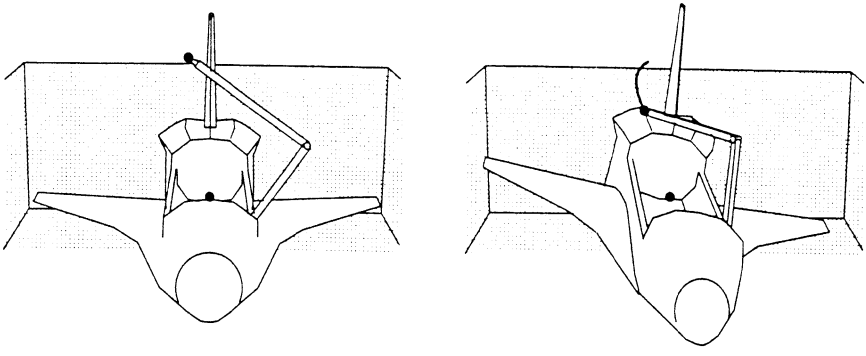

Figure 5: A maneuver using linear interpolation in joint space, ignoring the effect on shuttle attitude.

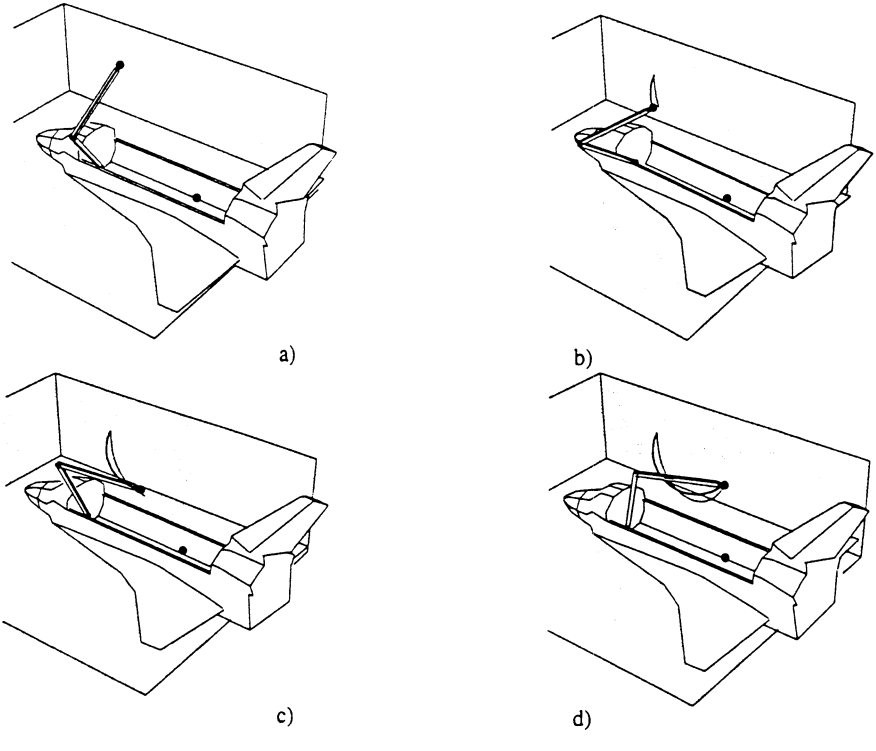


Figure 6: Snapshot sequence of shortest path in inertial space (dark line) and shortest path in shuttle coordinates (light line).

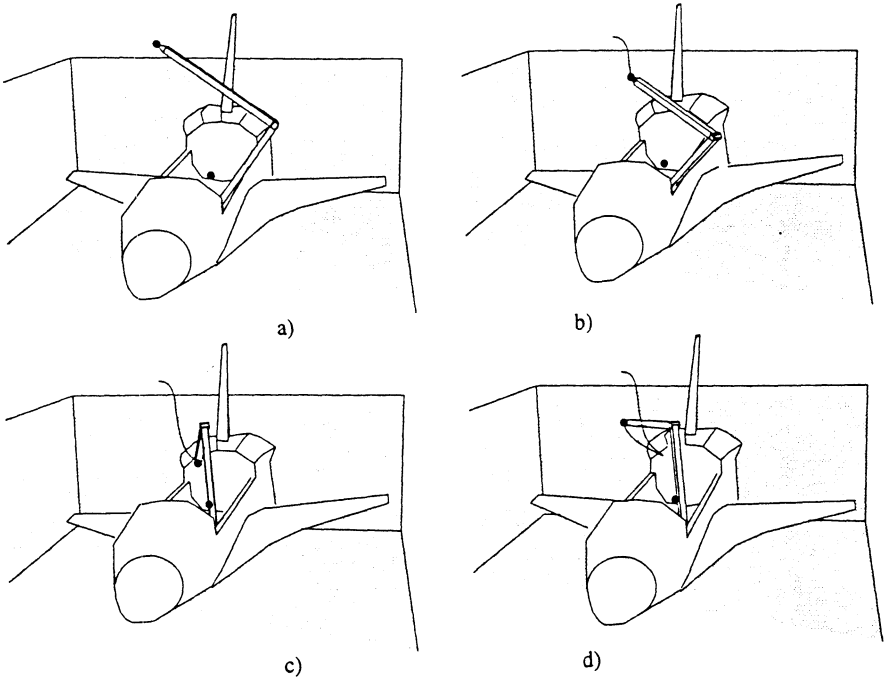


Figure 7: Snapshot sequence of a time-optimal robot maneuver.

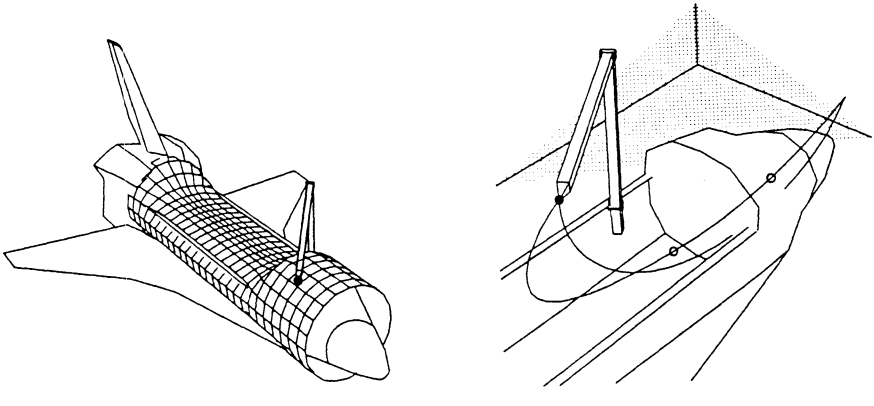

Figure 8: The smooth constraint manifold and the minimum maximum acceleration trajectories with and without the constraint.